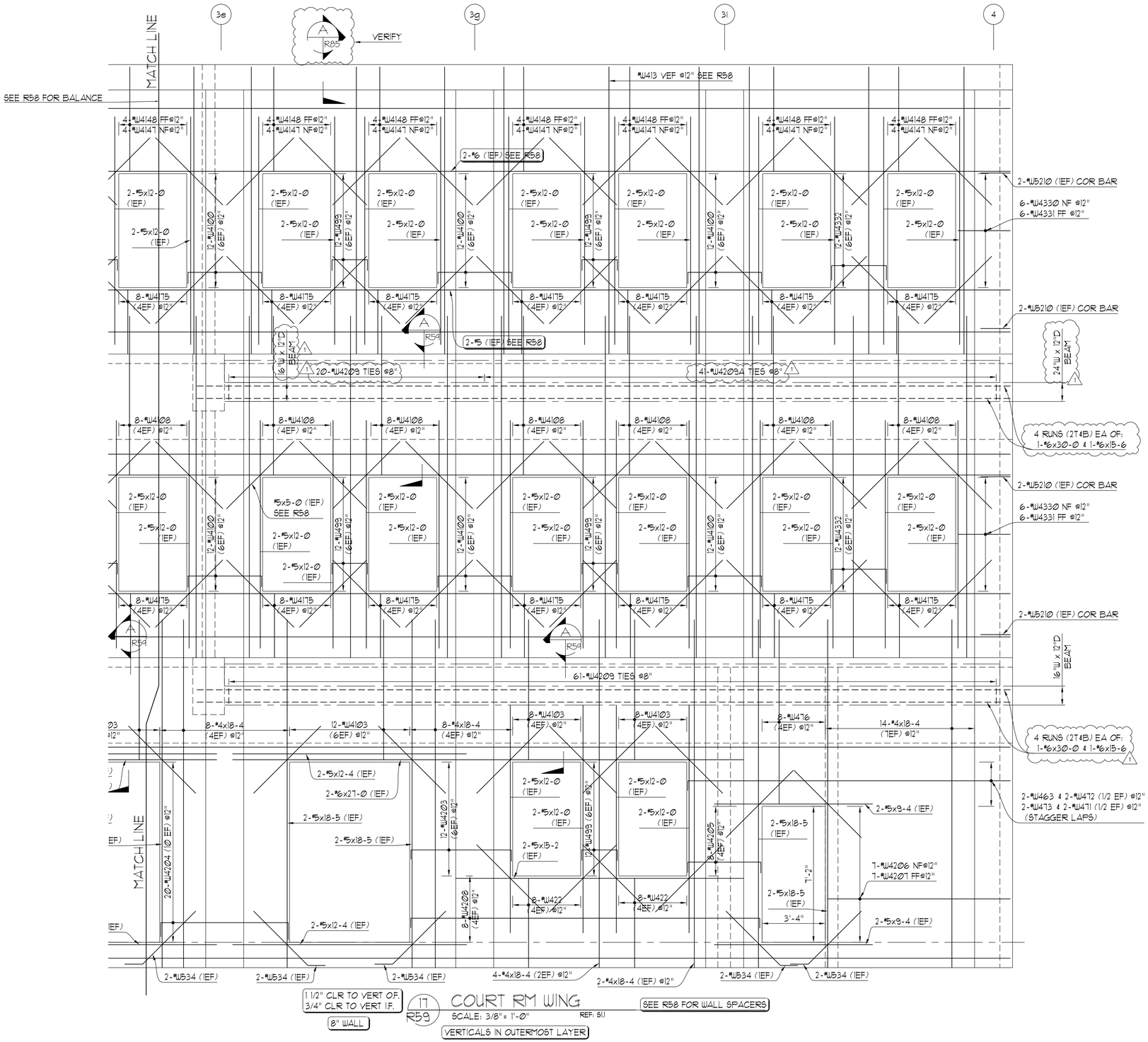

17 R59 COURT RM WING
SCALE: 3/8" = 1'-0" REF: S1.1

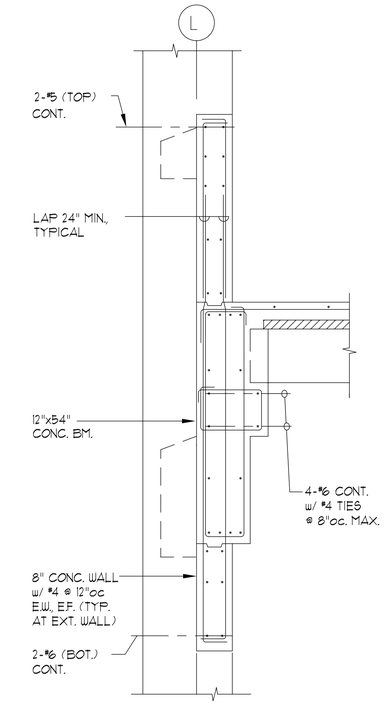

A R59 SECTION
SCALE: 3/4" = 1'-0" REF: 5/S7.2

NOTES:
-SEE R85 FOR TYPICAL DETAILS
-SEE R57, R86, & R65 FOR BENT BAR DETAILS
-CONTR/ENGR: THE ELEVATION VIEWS DENOTE WHICH STEEL IS DETAILED IN THE OUTERMOST LAYER - PLEASE VERIFY

REVISIONS		DATE	BY
1	MISC. CORRECTIONS	4/28/03	RBC
0	ISSUED FOR APPROVAL	2/13/03	RBC

The full intent and purpose of this drawing is the placing and fabrication of reinforcing steel bars ONLY. It is NOT to be used as a means of communication between the Architect, Engineer, Contractor or any other Sub-trade.

THIS DRAWING IS NOT TO BE SCALED

DRAWN BY NIGHTHAWKS, INC. DATE DRAWN 2/13/03
CONTRACTOR UNLIMITED CONSTRUCTION
ENGINEER MITSUNAGA & ASSOCIATES, INC.
REINFORCING STEEL GRADE GRADE: 60 / S&T: 40 UNO

South Pacific Steel Corp
91-178 Kalaeloa Blvd Kapolei, Hawaii 96707 Tel: 808 682 IRON(4766)
Fax: 808 682 4732 e-mail: sopacst@lava.net

PROJECT
KAUAI JUDICIARY COMPLEX
KALAPAKI, LIHUE, KAUAI, HAWAII

TITLE OF DRAWING
COURT ROOM WING WALLS
WALL ELEVATION 17 (Balance)

PROJECT NO. 409
DRAWING NO. R59